Music Box Instructions

Dan Angelo Vergara

1.1 Project Genesis & Requirements

The Music Box began with a personal mission: to create a unique, meaningful gift for a special someone. While traditional hand-churn music boxes offer nostalgic charm, they are mechanically limited to a single, fixed melody. My objective was to engineer a digital evolution of this concept—a fully programmable, audio system capable of storing an entire library of tracks, complete with a real-time visual interface and tactile user controls. As shown here in **Figure 1**

Figure 1 Music Box

1.2 Engineering Procurement (BOM)

Component selection was driven by the need for compact footprint and reliable communication protocols (I2C and UART). I managed the full procurement process, tracking lead times and costs via a centralized Bill of Materials BOM. So before you begin, please refer to the BOM and buy the necessary materials.

Connecting the Electronics

2.1 Custom Power Interrupt & USB Modification

To ensure a hard physical disconnect for the system, I bypassed the standard software sleep modes in favor of a custom hardware power toggle. I spliced a standard USB-to-USB-B cable to access the 5V VCC (red) power wire **Figure 2**. After cutting the VCC line, I stripped the wires to expose the solid core and utilized two Wago connectors to create a secure, modular interrupt circuit. By connecting the power button in series between the two Wagos, I created a reliable "kill switch" for the entire system. For the final build, I opted to use a portable power bank via this modified USB cable rather than a 9V battery and voltage regulator, ensuring a more stable and long-lasting current supply for the audio and LCD components.

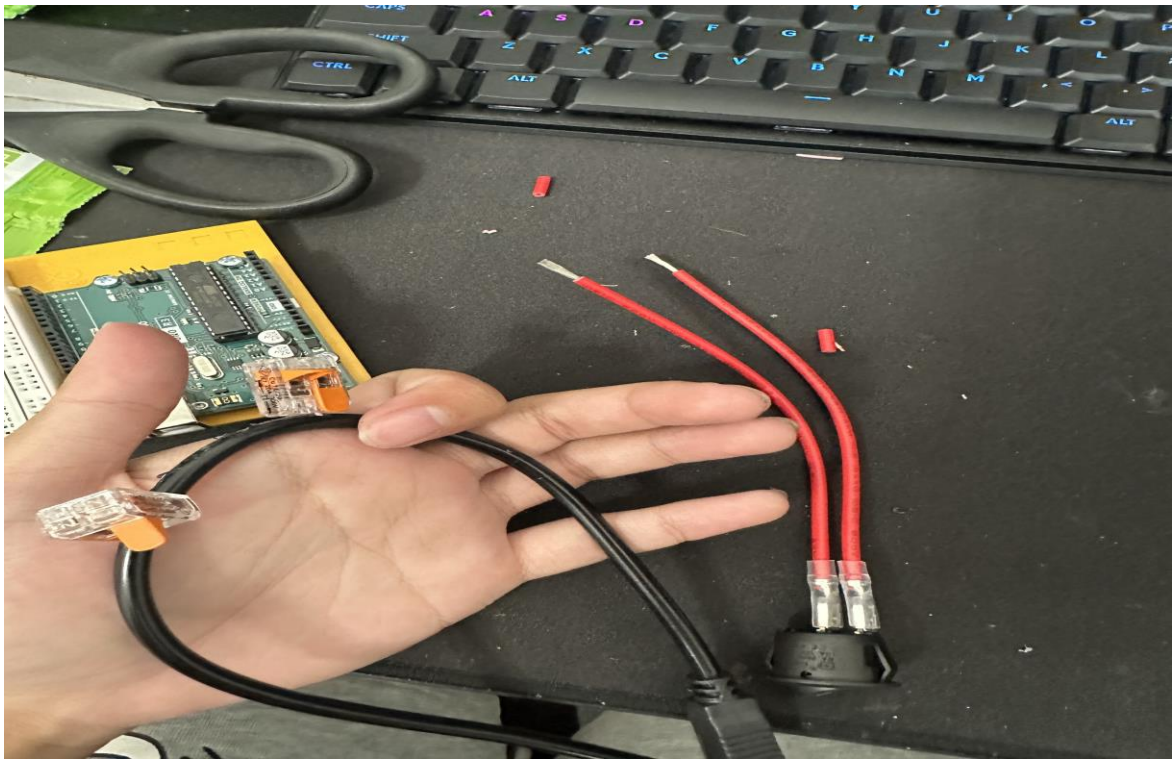

Figure 2 USB to USB-B Spliced for Push Button

2.2 Audio Subsystem & Signal Integrity

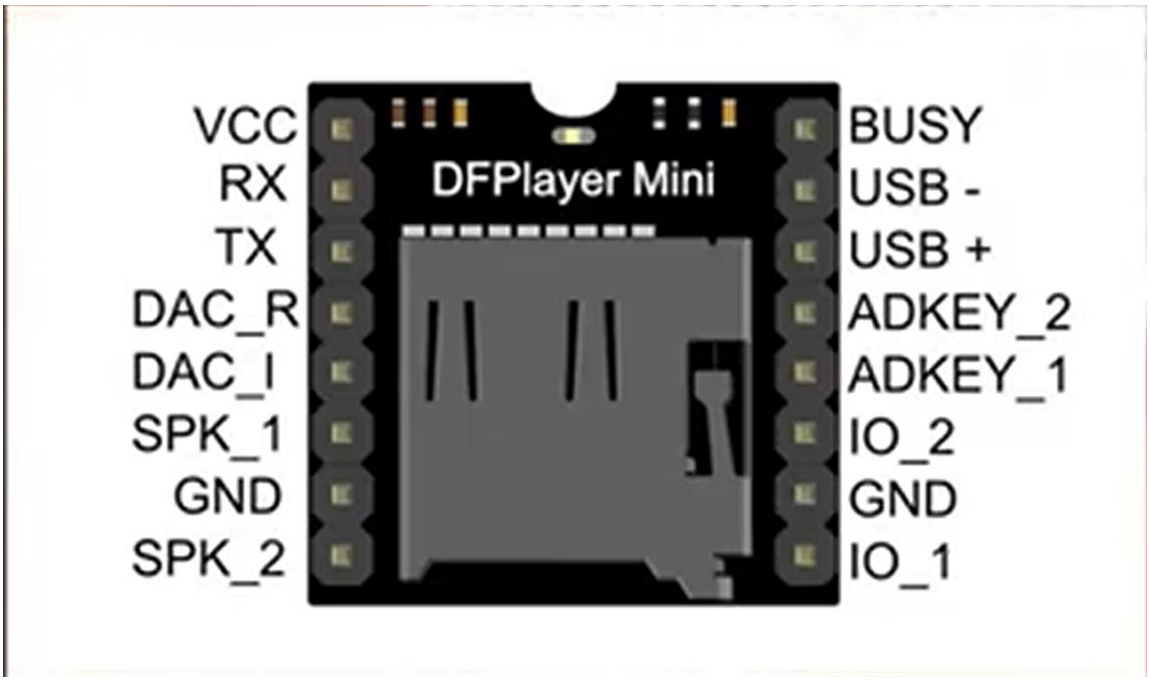

Figure 3 DFPlayer Connections

The audio engine is powered by a DFPlayer Mini communicating with the Arduino R3 via UART (Serial). Make sure to firmly follow the given manuscript to ensure connections are proper; look at **Figure 3.** To ensure the longevity of the components and maintain signal integrity, I implemented the following:

- Logic Level Protection: Integrated a 1000 Ohm (1k) resistor on the RX line to protect the 3.3V audio module from the 5V Arduino logic.
- Speaker Configuration: Connected the speakers in series rather than parallel. This increases total impedance, protecting the DFPlayer's internal amplifier from over-current and naturally limiting the volume to a comfortable, non-distorted level suitable for the enclosure.

- Stability: Grounded both sides of the DFPlayer Mini to the common rail on the Arduino R3 to reduce electrical noise and ensure a clean 5V supply.

2.3 User Interface & Peripheral Wiring

The system features three distinct methods of user interaction: Analog Volume Control: A 10k Ohm linear potentiometer is used for volume scaling. I mapped the 3 pins to VCC, GND, and an Analog Signal pin on the R3.

Engineering Note: In my specific component, the black wire was designated as the signal wire. Strict pin-out verification was required during assembly to prevent a short circuit to prevent the Genie from surfacing his face.

Tactile Navigation: Three momentary push buttons were integrated into digital pins 2, 3, and 4. These are grounded and utilize the Arduino's internal pull-up resistors to trigger track changes (Next, Previous, Play/Pause). Visual Interface: A 16x2 I2C LCD provides real-time system status. By using the I2C protocol, I reduced the required wiring from 12 pins down to just 4 (VCC, GND, SDA, SCL), significantly improving cable management within the balsa wood enclosure. Do make sure you connect the SD Card and put music in the re to make sure your speakers are properly working, you can use your own code or the code I provided Here. By the end, it should look like this as for now we are simply making it easy for ourselves with connections and all should be working.

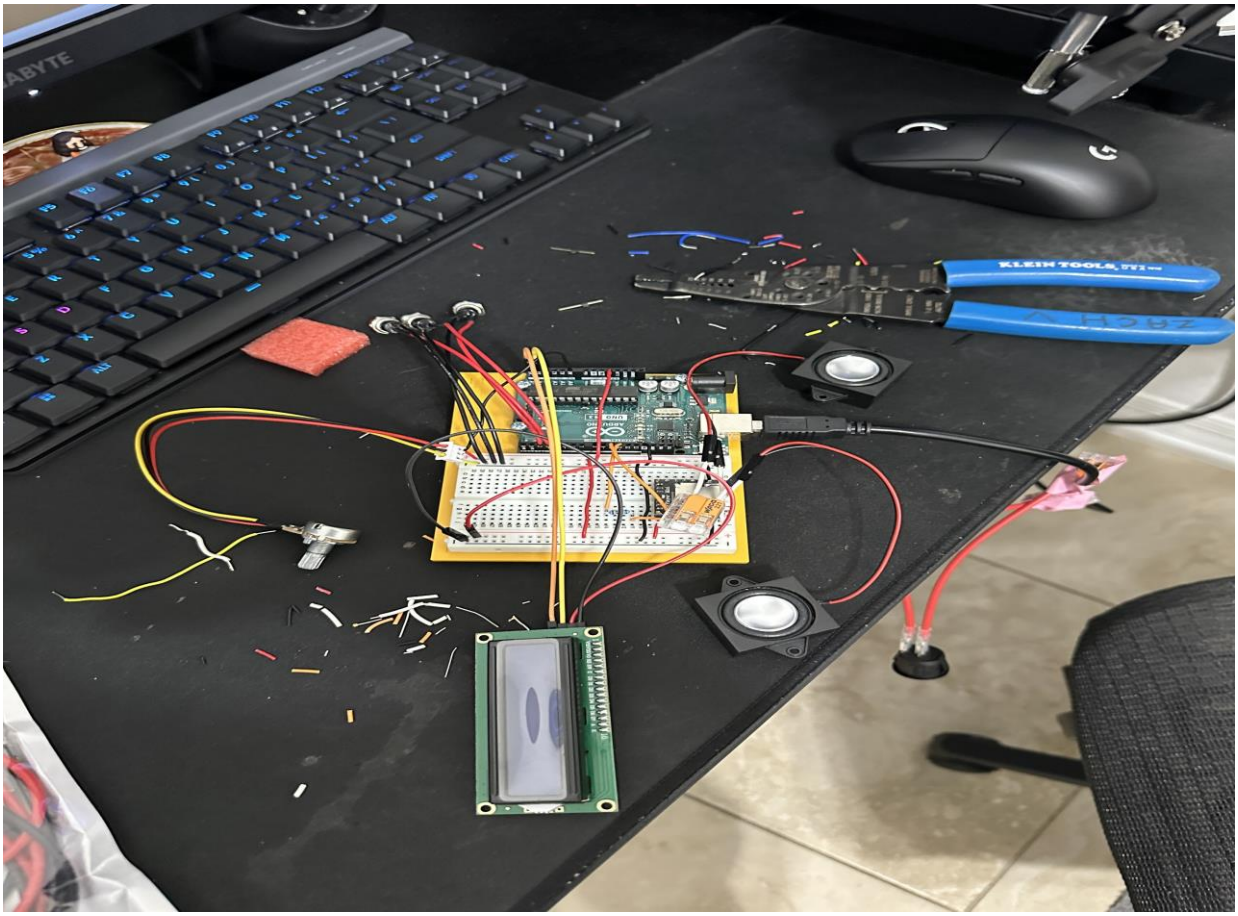

Figure 4 Electronics Connected

3.1 Aperture Machining & Material Selection

For the system enclosure, I selected balsa wood due to its lightweight properties and ease of prototyping. However, balsa wood presents specific challenges regarding structural integrity during machining. I utilized a high-speed drill to create the apertures for the buttons, potentiometer, and LCD.

Engineering Note: While hand-tools like hobby knives can be used, achieving precise circular tolerances for button inserts is significantly more difficult without a drill. I ensured

a "friction-fit" for the tactile buttons to maintain a professional look and feel, preventing any wobble during user interaction.

3.2 Internal Structural Support (L-Cleat System)

To support the primary interface plate (which holds the LCD, buttons, and knobs), I engineered a 6-point "L-cleat" support system using reinforced wood segments.

Placement: Four cleats were installed in the corners of the enclosure, with two additional "center-support" cleats placed at the top and bottom midpoints.

Function: This 6-point distribution ensures the faceplate is perfectly balanced and does not sag or shift when the user applies pressure to the buttons or adjusts the volume knob. This provides a rigid, tactile response similar to a commercial-grade product.

3.3 Component Mounting & Cable Management

Given the density of the wiring within a compact enclosure, I implemented a multi-layered approach to component mounting and strain relief:

Securing Interconnects: I utilized a combination of electrical tape and high-strength double-sided adhesive to organize the jumper wire "rat's nest," preventing wires from interfering with

the mechanical action of the buttons. We already set up the electronics and simply fitting them through the holes is good, so you really only need to put the plate on top.

Structural Adhesion: Cyanoacrylate (superglue) was used to bond the L-cleats to the main chassis, providing a permanent, high-vibration-resistant bond that ensures the internal "guts" of the music box to remain secure during transport.

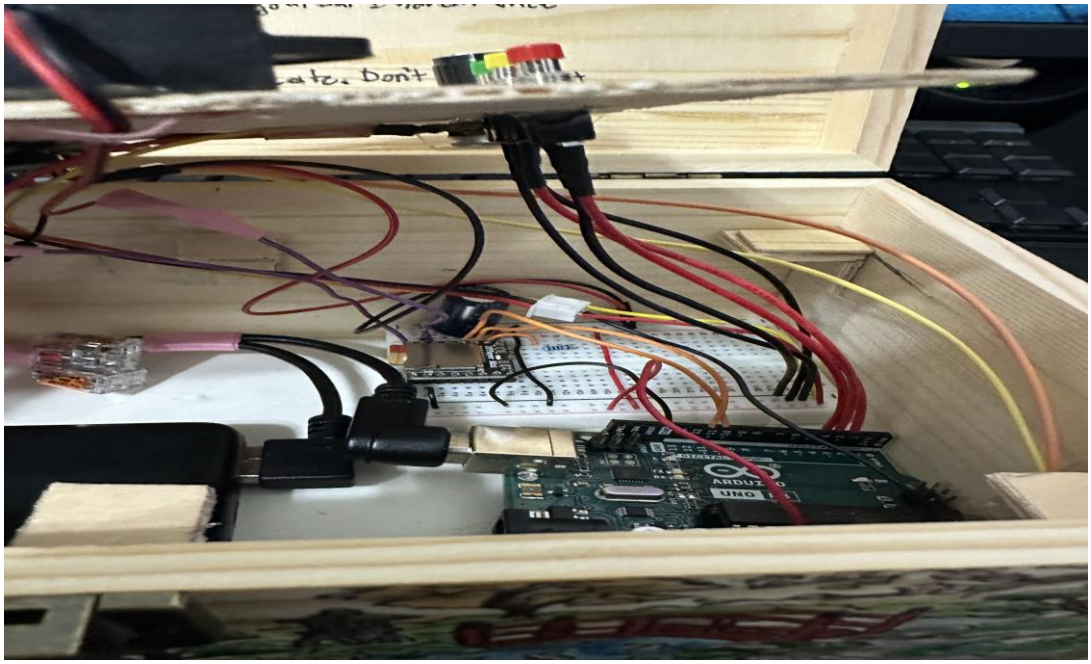

Figure 5 Inside of Box

4.1 Aesthetic Rendering & Material Treatment

To achieve the DIY aesthetic, I moved away from raw industrial finishes in favor of a hand-rendered, organic look. I utilized Tombow artist markers and colored pencils to apply a deep, multi-tonal wood grain effect to the balsa wood chassis. This technique allowed for

precise control over the "weathered" appearance, ensuring the device felt like a piece of storied equipment rather than a standard electronics project.

4.2 Thematic Integration (The "False Forest" Plate)

The primary interface plate—which houses the LCD and controls—was designed to be a "False Floor."

Texture & Concealment: I applied a layer of stabilized dried moss across the entire top surface. This serves two purposes: Aesthetic: It creates a "forest floor" theme that aligns with the gift's inspiration.

Functional Concealment: The moss naturally hides the mounting screws and the edges of the LCD cutout, providing a seamless transition between the mechanical components and the enclosure.

Result: By integrating organic materials with embedded electronics, I successfully created a functional "type beat" design that balances high-tech audio processing with a low-tech, DIY Exterior.